Lógica e Sistemas Digitais

Realização Prática de um Circuito Digital em Breadboard

Como Passar do Esquema para um Circuito?

- Exemplo:

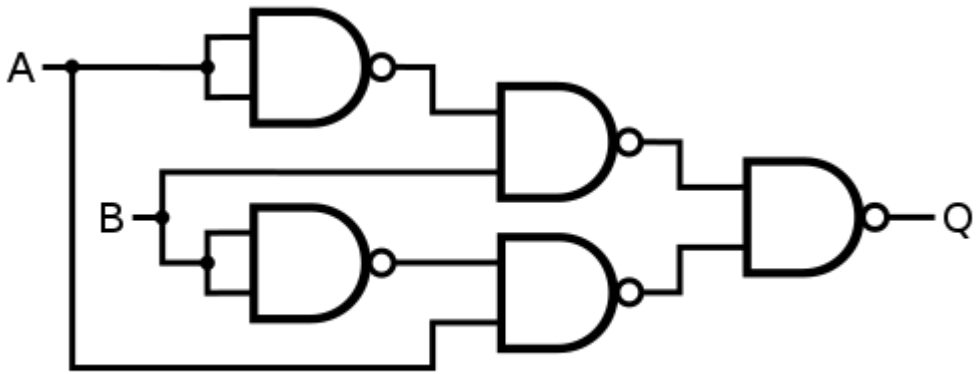

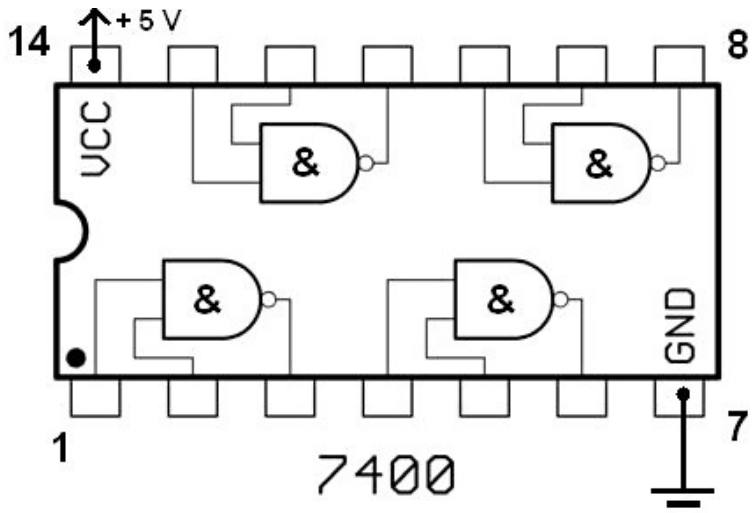

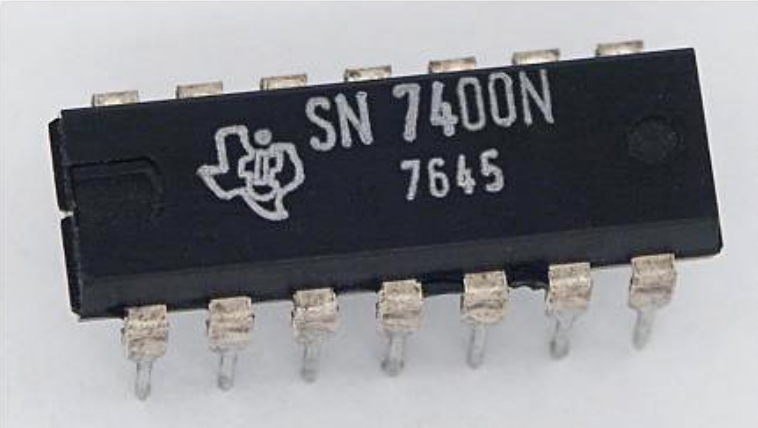

Lista de Circuitos Integrados 74xx

FAIRCHILD SEMICONDUCTOR™

September 1983
Revised January 2005

MM74HC00 Quad 2-Input NAND Gate

MM74HC00
Quad 2-Input NAND Gate

General Description

The MM74HC00 NAND gates utilize advanced silicon-gate CMOS technology to achieve operating speeds similar to LS-TTL gates with the low power consumption of standard CMOS integrated circuits. All gates have buffered outputs. All devices have high noise immunity and the ability to drive 10 LS-TTL loads. The 74HC logic family is functionally as well as pin-out compatible with the standard 74LS logic family. All inputs are protected from damage due to static discharge by internal diode clamps to V_{CC} and ground.

Features

- Typical propagation delay: 8 ns
- Wide power supply range: 2–6V
- Low quiescent current: 20 µA maximum (74HC Series)
- Low input current: 1 µA maximum
- Fanout of 10 LS-TTL loads

Ordering Code:

Order Number	Package Number	Package Description
MM74HC00M	M14A	14-Lead Small Outline Integrated Circuit (SOIC), JEDEC MS-012, 0.150" Narrow
MM74HC00MX_NL	M14A	Pb-Free 14-Lead Small Outline Integrated Circuit (SOIC), JEDEC MS-012, 0.150" Narrow
MM74HC00SJ	M14D	Pb-Free 14-Lead Small Outline Package (SOP), EIAJ TYPE II, 5.3mm Wide
MM74HC00MTC	MTC14	14-Lead Thin Shrink Small Outline Package (TSSOP), JEDEC MO-153, 4.4mm Wide
MM74HC00MTCX_NL	MTC14	Pb-Free 14-Lead Thin Shrink Small Outline Package (TSSOP), JEDEC MO-153, 4.4mm Wide
MM74HC00N	N14A	14-Lead Plastic Dual-In-Line Package (PDIP), JEDEC MS-001, 0.300" Wide
MM74HC00N_NL	N14A	Pb-Free 14-Lead Plastic Dual-In-Line Package (PDIP), JEDEC MS-001, 0.300" Wide

Devices also available in Tape and Reel. Specify by appending the suffix letter "X" to the ordering code.
Pb-Free package per JEDEC J-STD-020B.

Connection Diagram

Pin Assignments for DIP, SOIC, SOP and TSSOP

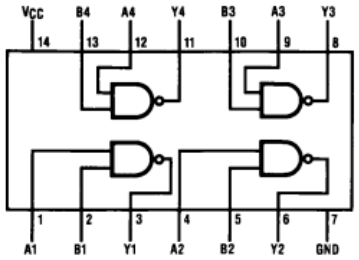

Top View

Logic Diagram

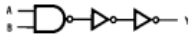

© 2005 Fairchild Semiconductor Corporation DS005292 www.fairchildsemi.com

Funcionam com alimentação +5V

Configuration	Buffer	Inverter
Hex 1-input	74x34	74x04

Configuration	AND	NAND	OR	NOR	XOR	XNOR
Quad 2-input	74x08	74x00	74x32	74x02	74x86	74x7266
Triple 3-Input	74x11	74x10	74x4075	74x27	n/a	n/a
Dual 4-input	74x21	74x20	74x4072	74x29	n/a	n/a
Single 8-input	n/a	74x30	74x4078	74x4078	n/a	n/a

https://en.wikipedia.org/wiki/List_of_7400-series_integrated_circuits

Como Montar um Circuito Electrónico?

- Breadboard – tábua do pão
- Contém furos com molas no interior para estabelecer contacto elétrico.
- Os furos do interior estão ligados em linhas verticais (para sinais), e os de fora em linhas horizontais (para alimentação + e -).
- Usar fios de ligação (jump wires) com pontas soldadas (pref borracha)

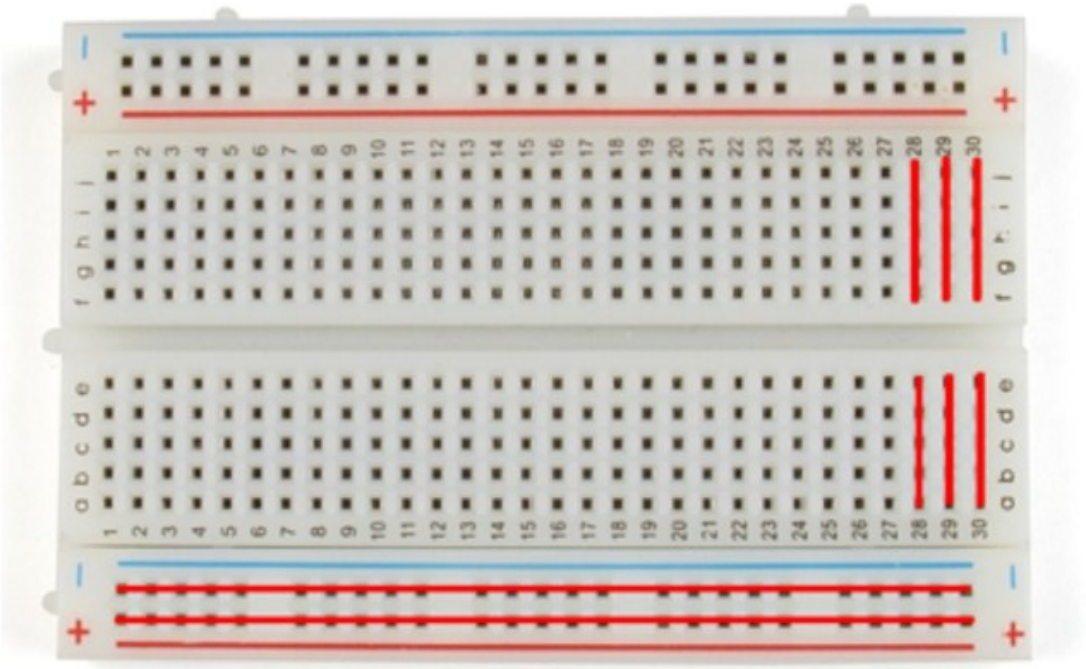

Como Testar um Circuito Eletrónico?
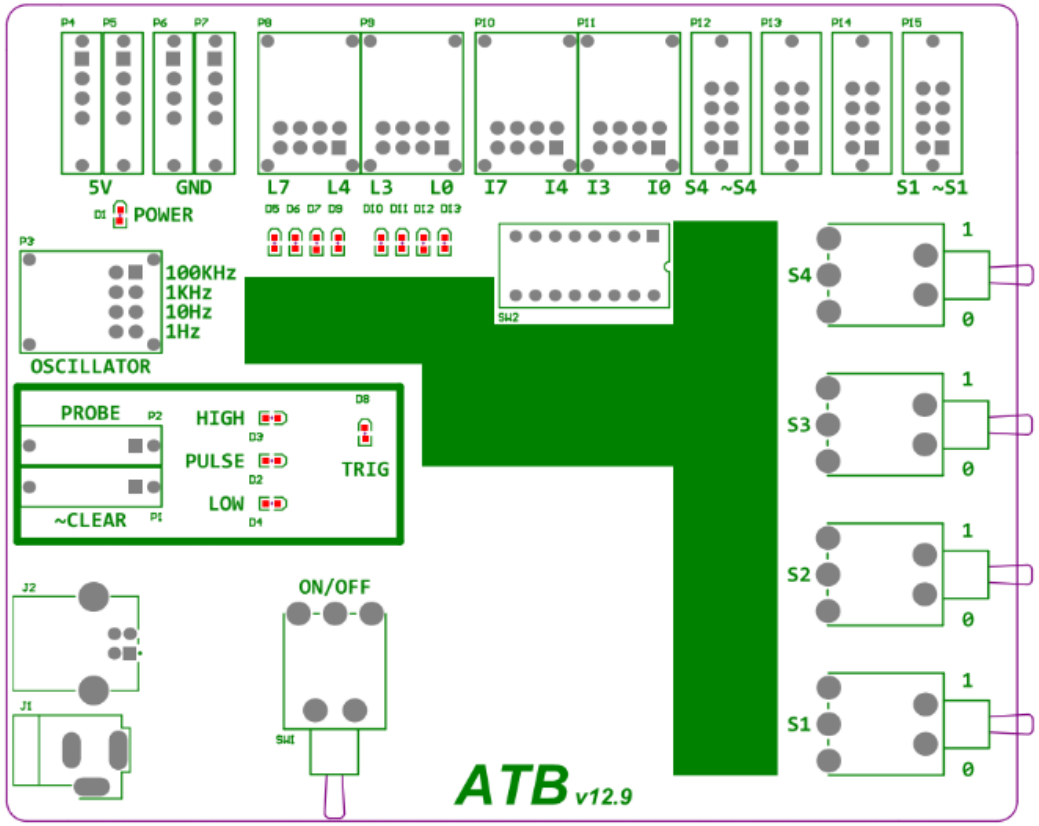
- Depois de montado e verificado:
- Ligar os sinais de entrada a interruptores, e os de saída a LEDs, na placa de teste (ATB)
- Ligar a alimentação. Cuidado para não trocar a polaridade!
- Acionar as entradas e observar as saídas